Landtechnik
Agricultural Engineering

Operation & maintenance

Original operating manual

Bine loader

AN 70

WOLF

Declaration of Incorporation

EG-Einbauerklärung
Declaration of Incorporation

im Sinne der EG-Richtlinie 2006/42 EG über Maschinen (Anhang II B)
according to EC-Directive 2006/42/EC on Machines (Annex II B)

WOLF Anlagen-Technik GmbH & Co. KG
Münchener Str. 54
85290 Geisenfeld, GERMANY

Hiermit erklären wir, dass die nachstehend beschriebene unvollständige Maschine
We herewith declare that the partly completed machine described below

Bezeichnung der Maschine *Denomination of the machine*	**Rebenladegerät** *Bine Loader*
Typenbezeichnung *Type Name*	**AN...**
Fabrikatsnummer *Serial number*	...
Baujahr *Year of manufacture*	2020

alle grundlegenden Anforderungen der Maschinenrichtlinie 2006/42/EG erfüllt, soweit es im Rahmen des Lieferumfangs möglich ist. Ferner erklären wir, dass die speziellen technischen Unterlagen gemäß Anhang VII – Teil B dieser Richtlinie erstellt wurden.
is complying with all essential requirements of the Machine Directive 2006/42/ EC, as far as the scope of delivery allows it. In addition we declare that the special technical documentation has been compiled in accordance with part B of Annex VII.

Die unvollständige Maschine entspricht zusätzlich den Bestimmungen der Richtlinien: *In addition the partly completed machine is complying with the regulations of Directives*	**Maschinenrichtlinie 2006/42/EG** *Machine Directive 2006/42/EC*
	Druckgeräterichtlinie 2014/68/EU *Pressure Equipment Directive 2014/68/EU*

Wir verpflichten uns, den Marktaufsichtsbehörden auf begründetes Verlangen die speziellen Unterlagen zu der unvollständigen Maschine über unsere Dokumentationsabteilung innerhalb einer angemessenen Zeit zu übermitteln.
We undertake to transmit, in response to justified request by the market surveillance authorities, the special documents on the partly completed machine by our documentation department within a reasonable time.

Die unvollständige Maschine darf erst dann in Betrieb genommen werden, wenn gegebenenfalls festgestellt wurde, dass die Maschine oder Anlage, in welche die unvollständige Maschine eingebaut werden soll, den Bestimmungen der Richtlinie 2006/42/EG über Maschinen entspricht und die EG-Konformitätserklärung gemäß Anhang II A ausgestellt ist.
The partly completed machine must not be put into service until the final machine or plant into which it is to be incorporated has been declared in conformity with the regulations of Directive 2006/42/EC on Machinery, where appropriate, and until the EC Declaration of Conformity acc. to Annex II A is issued.

Bevollmächtigter der WOLF Anlagen-Technik GmbH & Co. KG für die Zusammenstellung aller technischeren Unterlagen ist Herr Erich Obster Leitung Technik
Person authorized by WOLF Anlagen-Technik GmbH & Co. KG to compile the complete technical documentation is Mr. Erich Obster Management Technology

Geisenfeld, den 01.01. 2020
Place, Date

ppa.
Erich Obster, Mitglied der Geschäftsführung
Erich Obster, Member of the management

Quality Management

QZV
Verein zur Qualitätssicherung und Zertifizierung
für den Mittelstand e.V.

QZV DIN EN ISO 9001:2015

ZERTIFIKAT

Der Verein zur Qualitätssicherung und Zertifizierung für den Mittelstand e.V.
bescheinigt, dass das Unternehmen

WOLF Anlagen-Technik GmbH & Co. KG
Heizung-Lüftung-Klimatechnik
Oberflächen- und Landtechnik
Münchener Str. 54
85290 Geisenfeld

ein Qualitätsmanagement-System entsprechend der DIN EN ISO 9001:2015 eingerichtet hat und unterhält.
Der Nachweis wurde in einem Audit erbracht.

Prüf-Bericht Nr.: **252811/B**

erstellt durch: _____
Prof. Dr.-Ing. Regina Schreiber, Professorin an der Hochschule Kempten

Dieses Zertifikat wurde ausgestellt am: 15.05.2018 und gilt bis zum: 14.05.2021
Zertifikat -Register Nr.: **25181198**

für den QZV _____
Prof. Dr.-Ing. M. Rebhan, Professor an der Hochschule München

QZV e.V. Schliersee str. 46, 81539 München
Registrierungsnummer 33150102 (ACB e.V.)

ACB

Bine loader

AN70

The latest version of the operating and maintenance manual can be found at:

www.wolf-geisenfeld.de/downloads

Content

1. Intended use 6

2. Instructions and regulations for the operator 7

02.01 Hazard analysis 7
02.02 Safety devices 7
02.03 Presence in danger area 7
02.04 Machine inspection 7
02.05 Processing materials 8

3. General safety – accident prevention 8

03.01 Symbols 8
03.02 General information 9
03.03 Safety Instructions – accident prevention 9
03.04 Regulations for the operator 10

4. System data 10

5. Storage, transport and installation 10

05.01 Goods acceptance, damage in transit 10
05.02 Disposable packaging information 10
05.03 Storage and functional integrity 11
05.04 Transport 11

6. Description 11

06.01 Bine entrance 8.0 12
06.02 Separation point 9.0 12
06.03 Tear-off head 10.0 12

7. Assembly 13

07.01 Connection of the separation point 13
07.02 Drawing in and tightening the chain 13
07.03 Attaching the bine guide/handrail 14
07.04 Adding gearbox oil 14
07.05 Mounting the cross slide 14
07.06 Mounting the chain covers 15

8. Installation 15

9. Working procedure 16

10. Commissioning 17

11. Adjustments 18

11.01 Chain tension 18
11.02 Disc cutter 18
11.03 Guide brackets 19
11.04 Profile belt 19
11.05 Deflection bracket 19
11.06 Chain speed 20

12. Separation points 20

12.01 Separation point A 20
12.02 Separation point B 20

13. Operating personnel/training 21

14. Workplace of the operating personnel 21

15. Maintenance 22
15.01 Maintenance checklist 22
15.02 Replacing the profile belt 22
16. Cleaning 23
16.01 After the harvest 23
17. Dismantling and disposal 24
17.01 Dismantling 24
17.02 Disposal 24
18. Emergency number (EU) 112 25
19. Datasheet – gearbox oil 26
20. Datasheet - lubricants for bearings 27

1. Intended use

WARNING

WOLF bine loaders are only intended for use in hop harvesting, for cutting and harvesting hop bines from a hop garden typical for the Holledau region (bines approx. 8 m, freely suspended approx. 0.5 m apart). Any other use is not in accordance with the intended purpose of the machine.

The manufacturer and supplier cannot be held liable for damage or injury resulting from lack of attention or improper, negligent or incorrect use and operation, even if unintentional. The product is a partly completed machine.

- The bine loader must be firmly secured to the tractor such that it can reliably perform its function. It must be secured in such a way that both functionality and stability are guaranteed when harvesting the hop bines, even when vibrations and bumps occur, e.g. on unpaved paths.
- Do not modify the bine loader or its mounted parts. Modifications will render the Declaration of Incorporation in accordance with the Machinery Directive and any warranty and liability claims null and void.
- The machine must not be operated without safety covers/chain covers 7.0 (Fig. 1). This will render the operating permit null and void.
- The bine loader is only suitable for harvesting natural hop bines that are ready to be harvested. The bine loader can be used to harvest the hop bine varieties currently found on the international market. However, machine performance depends on the individual hop varieties, the plant's ripening time, weather and local conditions. Machine performance can therefore vary. No guarantee of a specific bine output per hour can be given.
- Only expert personnel fully trained in the operation may start and operate the bine loader. Operation requires a driving licence that is legally valid in the relevant country. Only trained adult personnel with no physical disability (fully competent persons) may operate the bine loader.
- An adequate safety clearance (escape route) must be maintained during operation and maintenance of the bine loader.
- During operation, the bine loader is controlled by only one person (fully competent person). No other persons/harvesters may stand in the immediate vicinity of the machine, or only at an adequate safety clearance. There is a risk to life.

At the time of its development and manufacturing, the bine loader was built in accordance with applicable engineering practices. The partly completed machine is considered to be operationally safe. However, there are associated hazards if it is not used properly by trained personnel. As a consequence, every person who is assigned to work on or with the bine loader must be properly trained in the operation of the partly completed machines and must have read the operating and maintenance manual prior to commencing work.

WARNING

Risks resulting from improper use
Any use deviating from the use described in this operating manual is considered improper. WOLF cannot be held liable for any resulting damage or injury. The user/operator carries the risk resulting from improper use. Any improper operation, incorrect use or misuse can cause life threatening injuries or death.

2. Instructions and regulations for the operator

This operating manual describes the safe and efficient handling of a bine loader. A copy of the operating manual must be stored near the equipment in a way that allows the user/operator to refer to it at any time. Users/operators must carefully read the operating manual before commencing work and must be capable of following the instructions and heeding the warnings in the manual. All safety notes, warnings and instructions must be strictly complied with. The local accident prevention guidelines and any applicable state and federal safety laws and regulations, as well as any other pertinent state and federal laws, regulations and guidelines apply.

Qualified personnel charged with

- installation
- commissioning
- maintenance
- troubleshooting
- decommissioning

must be instructed to follow this operating manual before starting work.

NOTICE

The machine may only be operated by trained expert personnel without any physical limitations who have reached the age of 18 or have reached the age of majority in the respective country (fully competent persons). The operators and those who work with the machine must receive training at least once every six months on accident prevention regulations, the correct operation of the machine and any possible health hazards!

WARNING

Danger if personal protective equipment (PPE) is not worn
Persons who operate, clean, maintain, transport, etc. the bine loader must always wear the necessary personal protective equipment (PPE). Protective equipment guards against physical injury and death in danger areas.

02.01 Hazard analysis

The operator of the bine loader must carry out a risk assessment and take the resulting appropriate work safety measures. In case of ambiguities, please contact the responsible state and federal institution for statutory accident insurance and prevention, or the applicable authorities.

02.02 Safety devices

WARNING

Risk due to deactivation of safety devices
Do not remove or deactivate safety devices such as chain covers/protective devices and the like. Before commissioning the bine loader, check that all protective devices have been properly fitted.

02.03 Presence in danger area

WARNING

Risk due to presence in danger area
Only trained persons are allowed to be present in the vicinity of the bine loader – with an adequate safety clearance – during operation and maintenance. All other persons are strictly banned from the danger area. Failure to follow these instructions may result in severe injury or death.

02.04 Machine inspection

The bine loader must be under control at all times. Check the function of the infeed chains, counter-belts, rubber band, cutting device, bearings, threaded joints, etc. several times a day; adjust and clean if necessary. When working, performing inspections or cleaning, switch off the bine loader, hydraulics and tractor, and secure them against restarting. Also prevent the tractor from rolling forwards or backwards.

WARNING

Risk due to unintentional restarting
Unauthorised or unintentional restarting of the bine loader after a stoppage could result in serious injury or death.

- Secure the bine loader against reactivation.
- Maintain an adequate safety clearance to e.g. moving parts.

Prior to commissioning, a responsible person must perform an inspection run to check whether there are any unsafe conditions in or around the machine.

02.05 Processing materials

The bine loaders may only be used to cut and harvest hop bines that are ready to be harvested.

3. General safety – accident prevention

Failure to observe the operating and maintenance manual can put persons appointed to do work at risk and can lead to malfunctions in the machine. Persons appointed to do work on the system must have demonstrated technical qualifications to do the job. The accident prevention rules and regulations must be followed at all times. Appointed persons must use the personal protective equipment needed for the task.

CAUTION

Caution!
To drive on public roads, the operator must hold a suitable driving licence valid in the relevant country and must abide by the country-specific road traffic regulations.

CAUTION

Caution!
Before commissioning the bine loader, check that all protective devices have been properly fitted. Chains, gears and bearings may only be lubricated when the tractor is stationary, switched off and secured against restarting. Also prevent the tractor from rolling forwards or backwards.

CAUTION

Caution!
During operation, no persons may stand in the immediate vicinity of the bine loader

CAUTION

Caution!
The operator must be given very in-depth training on how to operate the bine loader and about accident prevention regulations!

03.01 Symbols

Warning symbol
This is the safety alert symbol. It is used to alert you to potential death and physical injury hazards. You must strictly obey all safety instructions that follow this symbol to avoid injury or death.

Warnings in this operating manual are marked by signal word boxes. The signal words indicate the level of danger. You must always comply with the warnings and act with care in order to avoid fatal accidents, injury and damage to property.

DANGER — Death or serious injury will result if the corresponding precautionary measures are not taken.

WARNING — Death or serious injury will result if the corresponding precautionary measures are not taken.

CAUTION — Indicates a potentially dangerous situation that may result in minor to medium injury if it is not avoided.

NOTICE — Indicates a potentially dangerous situation that may result in property damage if it is not avoided.

You will find the adjacent symbol in the operating and maintenance manual in case of a crushing hazard.

You will find the adjacent symbol in the operating and maintenance manual in case of danger due to suspended loads.

You will find the adjacent symbol in the operating and maintenance manual in case of danger due to unintentional entry.

The adjacent symbol refers to information or application tips in the operating and maintenance manual.

The adjacent symbol indicates information in the operating and maintenance manual where trained personnel must be deployed.

You will find the adjacent symbol in the operating and maintenance manual in case of a risk of eye injury.

You will find the adjacent symbol in the operating and maintenance manual in case of a risk of head injuries.

The adjacent symbol indicates guidelines or cross-references in the operating and maintenance manual that are important for the operation of the machine.

03.02 General information

Please refer to the order confirmation (especially the technical specifications) and the specifications on the machine's nameplate for the area of application of the delivered product.

03.03 Safety Instructions – accident prevention

The machine was built according to the legal regulations valid at the time of delivery and complies with the latest engineering practices in terms of safety. Possible residual dangers are indicated by safety instructions and are described in the operating manual. Observe all safety instructions and warnings attached to the machine. Ensure these signs are always complete and clearly legible. Only operate the machine if all guards are in place.

- The operator of the machine is responsible for ensuring that all federal and state-specific accident prevention regulations are noted and followed during operation.
- Operating personnel may only execute the work expressly assigned to them. No children may work on the bine loader. Operating personnel must not wear flapping clothes or have long hair loose.
- Any type of repair, cleaning, lubrication (greasing) and the like is prohibited during operation. Only the responsible machine operator may start up the bine loader. This person is responsible for ensuring that no one can be injured when the machine starts up.
- Ensure that only the cut-off bine tips are drawn into the chain infeed
- Note that it is expressly forbidden to reach into and touch the machine and other rotating machine parts during operation/while the chain infeed is running.
- During operation:
  1. No one may remain in the immediate vicinity of the bine loader.
  2. Harvesters must always maintain an adequate safety clearance.
  3. The tractor with the side-mounted bine loader is moving forward
  4. If the bine is not pulled in, under no circumstances should you attempt to grab it (to help it along) with your fingers, hand or a tool, e.g. a pole.
  5. If a fault occurs, e.g. because a bine has not been properly cut or has fallen out, the machine must always be switched off first and secured against unintentional restarting. Also prevent the tractor from rolling forwards or backwards.

WARNING

Failure to observe safety instructions, regulations and measures
There is an enormous risk of injury or death in the machine area if anyone is careless or does not observe safety instructions, and all applicable state and federal accident prevention laws, regulations and measures. You must provide employees with continuous instruction (at least once daily).

WARNING

Risk from moving parts
Contact with the moving parts of the bine loader, in particular the rotating parts inside the machine, can seriously injure persons or cause death. Exercise extreme caution when performing tasks involving the moving parts of the bine loader. During maintenance, the machine and tractor must be switched off and secured against unintentional restarting. Every person working with the bine loader must wear the appropriate protective equipment.

All inspection openings and protective devices may only be removed when the machine is switched off and secured against unintentional restarting!

The inspection openings and protective devices must be properly reattached after completion of the work. The machine may only be operated with fully fitted inspection openings and protective devices.

When repairing faults, please note that all rotating machine parts (even concealed ones) can go on running although the machine is at a standstill, and that live parts can suddenly move.

DANGER

Risk due to unintentional restarting
Unauthorised or unintentional restarting of the bine loader after a stoppage could result in serious injury or death.

- Secure the bine loader and tractor against restarting
- Prevent the tractor from rolling away.

Only persons who have received written instruction/training by the operator of the system are permitted to switch on the bine loader.

In order to exclude a residual risk of hazard due to the installation situation on site, the operator, as the person responsible, must carry out an annual risk assessment and initiate the necessary measures.

03.04 Regulations for the operator

In general, the instructions in the section entitled "Instructions and regulations for the operator" apply.
Furthermore, trained and certified personnel must carry out a full inspection and maintenance on the entire bine loader at least once a year. This inspection should adhere to the manufacturer's instructions and the current safety requirement standards of the institution(s) for statutory accident insurance and prevention.
Always have a trained and certified technician perform these tasks!

NOTICE

All chains must be oiled at least twice a day.

4. System data

See nameplate on the machine near the tear-off head.

5. Storage, transport and installation

05.01 Goods acceptance, damage in transit

Unpack the goods in the presence of the driver and check for completeness and damage using the delivery note. The carrier must acknowledge damage in transit (date and signature)!
The freight carrier's insurer will reject any subsequent complaints.

05.02 Disposable packaging information

The delivery packaging is purely for transport use. It has been quantitatively reduced to the absolute minimum required so that high grade parts can be transported and unloaded without being damaged. The material is fully recyclable and can therefore be consigned to a recycling scheme. The recipient of the goods bears the disposal costs.

Alternatively, it is possible to return the packaging material to us. The party who ordered the goods will bear the costs of return transport. Please note that the packaging material must not be contaminated and must be delivered separately according to material groups.

05.03 Storage and functional integrity

If parts are shrink wrapped, this must be removed immediately after delivery. Shrink wrapping promotes condensation formation and thereby oxidation, especially on galvanised material.
All machine components and parts must be stored in such a way as to rule out the possibility of damage due to contamination, condensation, weather conditions and external influence.
Release the tension from the belts on any belt-driven components during storage, delayed commissioning or idle periods (stoppages longer than 3 months). Move and rotate any parts that turn or rotate once a month, such as motors, chains and gearbox.

NOTICE

As a fundamental principle, proceed as follows:

- Remove shrink wrapping
- Store the machine temporarily in a dry and dust-free place protected from the effects of weather.
- Follow additional operating and maintenance instructions of component manufacturers.
- Protect components and machines from contamination even when assembling the system.
- After the harvest, the machine must be thoroughly cleaned, lubricated and oiled.

05.04 Transport

DANGER

Risk when transporting the machine
Suspended loads can tip over or fall over, causing severe injury or death.

- Never stand under suspended loads.
- Use a suitable, tested means of transport or lifting equipment.
- Keep unauthorised persons out of the danger area.
- Ensure the loading and unloading area is well lit.
- Only move loads under supervision.
- The machine must be properly secured against lifting and slipping during transport.

6. Description

Bine loader
The bine loader has multiple parts and can be disassembled accordingly. The bine loader is attached to the side of the tractor/tractor unit using special devices at the front and rear. These devices, the hydraulic lines and connections are not included in the scope of delivery.

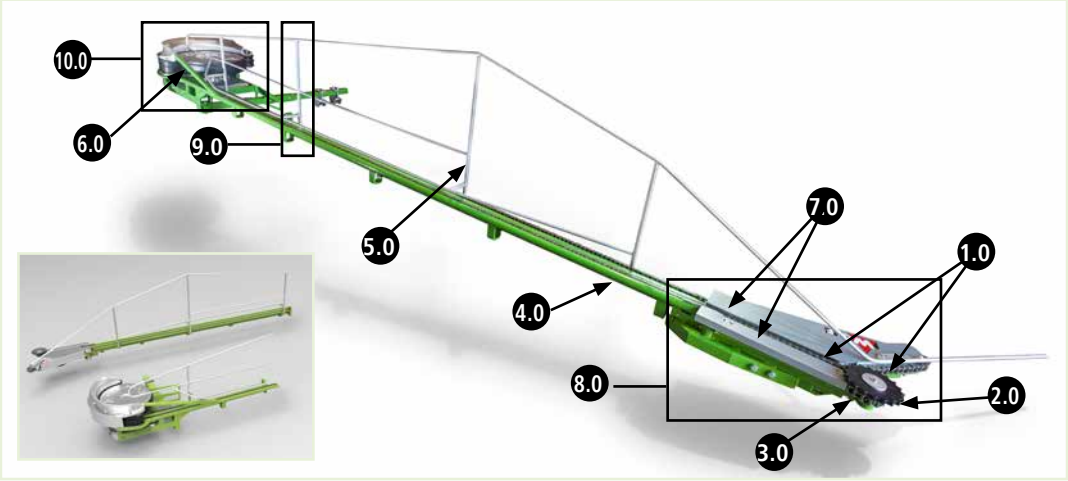

Fig. 1

1.0)	Infeed chains	5.0)	Bine guide/handrail	8.0)	Bine entrance
2.0)	Toothed rubber wheel	6.0)	Bine entrance at the tear-off head	9.0)	Separation point
3.0)	Disc cutter			10.0)	Tear-off head
4.0)	Chain guide	7.0)	Chain covers		

06.01 Bine entrance 8.0

The bine entrance can be disassembled.

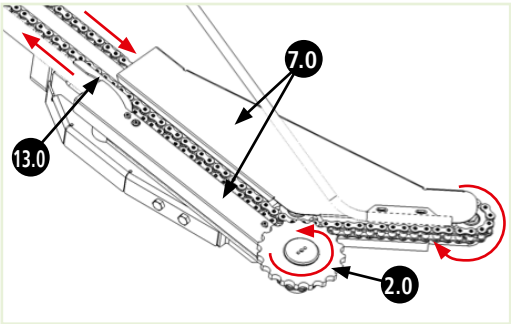

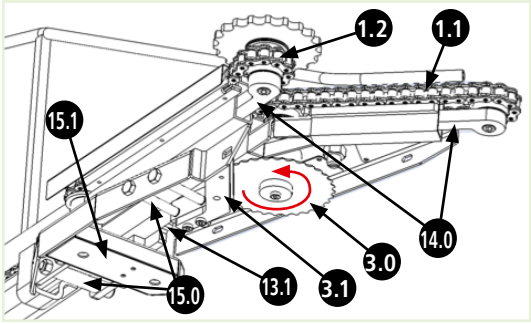

Fig. 2

1.1)	Infeed chain 1	3.1)	Cutting plate	14.0)	Chain tensioners
1.2)	Infeed chain 2	13.0)	Upper guide bracket	15.0)	Separation point – infeed chain 2
3.0)	Disc cutter	13.1)	Lower guide bracket	15.1)	Cover of the connecting chain

06.02 Separation point 9.0

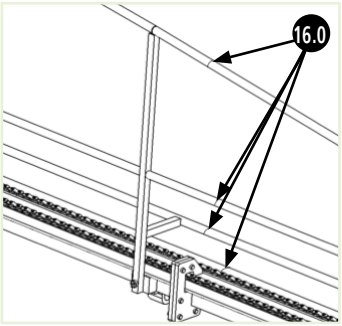

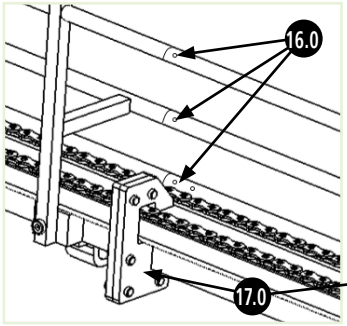

Fig. 3

16.0)	Spring pins	17.0)	Screw connections

06.03 Tear-off head 10.0

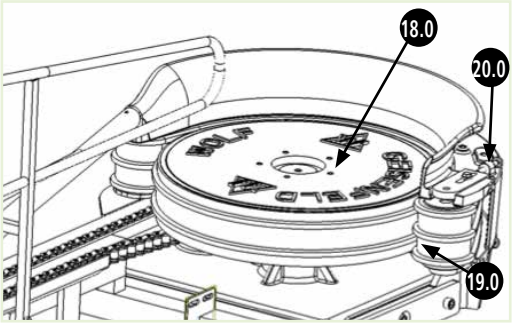

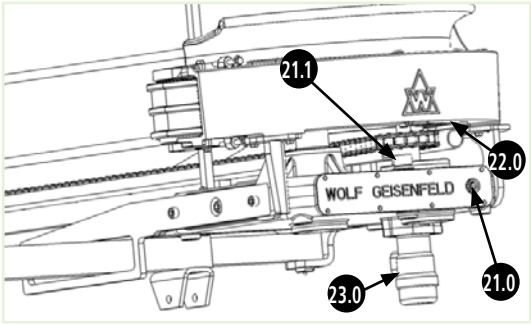

Fig. 4

18.0)	Drive pulley	21.0)	Oil level indicator*	23.0)	Drive motor
19.0)	Profile belt	21.1)	Oil filler neck		
20.0)	Belt tensioner	22.0)	Deflection bracket		

*To check the oil level indicator 21.0, the machine should be brought into a horizontal position and remain switched off for at least 5 minutes. If the oil level indicator 21.0 is half full, the oil level is OK. The machine is refilled with oil via the
oil filler neck 21.1. You will find the requirements for gearbox oil in:
„19. Datasheet – gearbox oil“ on site 26

7. Assembly

WARNING

When assembling the bine loader, the necessary personal protective equipment (PPE) must always be worn and the accident regulations must be observed. The bine loader may only be assembled by authorised, trained and competent persons/a specialist company (dealer).

See also the hazard warnings in point „05.04 Transport" on site 11.

07.01 Connection of the separation point

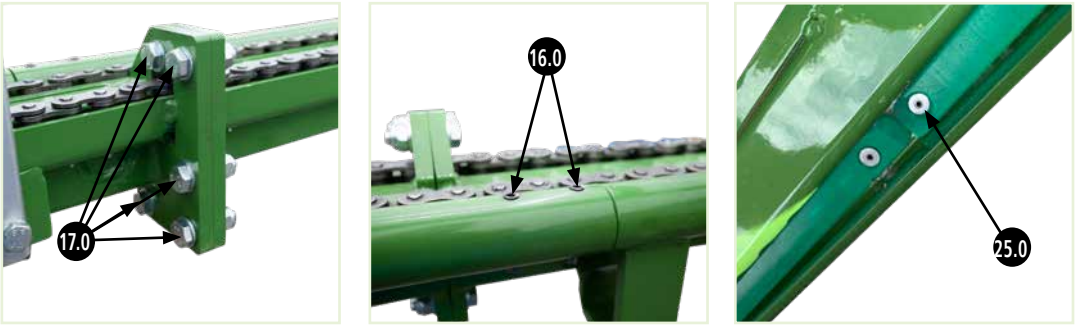

Fig. 5

Sequence of steps (Fig. 5)**:**

1. Push the two individual parts together in a straight line at the separation point.
2. Tighten the screws 17.0 to join the two individual parts together.
3. Insert the two spring pins 16.0.
4. Place the rivet 25.0 on the slide bar.

07.02 Drawing in and tightening the chain

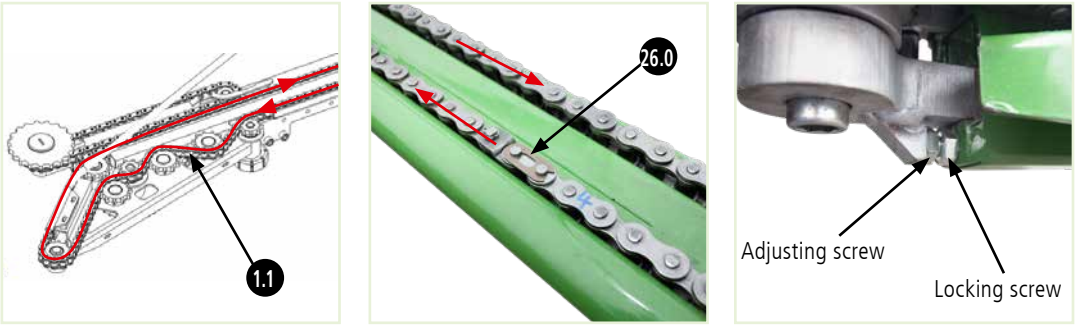

Fig. 6

Sequence of steps (Fig. 6)**:**

1. Draw in the infeed chain 1.1.
2. Attach the chain connector 26.0 and ensure that the chain is running in the right direction.
   The open part of the connector points away from the running direction of the chain.
3. Tension the chain using the adjusting and locking screw.

07.03 Attaching the bine guide/handrail

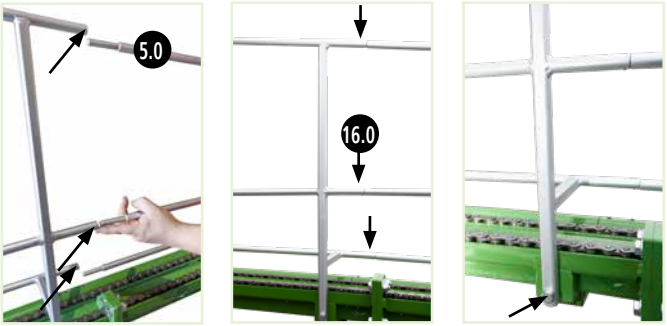

Fig. 7

Sequence of steps (Fig. 7)**:**

1. Join the bine guide/handrail 5.0 together at the connecting points.
2. Insert the spring pins 16.0.
3. Attach the handrail to the machine using the screws provided.

07.04 Adding gearbox oil

Sequence of steps (Fig. 8)**:**

1. Unscrew the oil filler neck 21.1.
2. Add 8 litres of suitable gearbox oil.
   (For specification see "„19. Datasheet – gearbox oil" on site 26).
   The oil level indicator 21.0 should be half full after waiting for 5 minutes with the machine in a horizontal position.
3. Replace the oil filler neck 21.1.

Fig. 8

NOTICE

Only suitable gearbox oils that meet the following standards may be used:

- Lubricating oils CLP according to DIN 51 517, part 3
- ISO-L-CKC according to ISO 6743-6 and ISO 12925-1
- Flender (ISO VG 150 – 680)

07.05 Mounting the cross slide

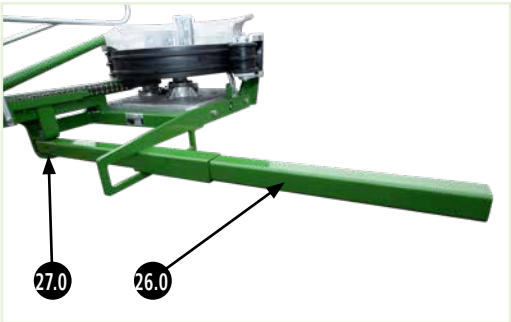

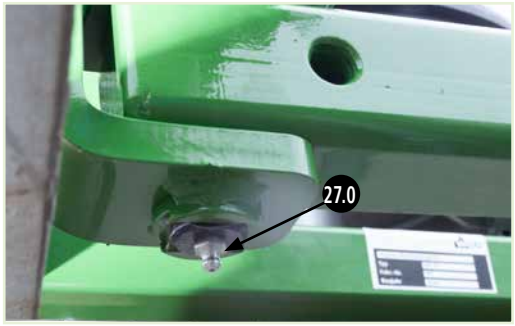

Fig. 9

Sequence of steps (Fig. 9)**:**

1. Insert the cross slide 26.0.
2. Insert the bolt 27.0 from below and use it to fix the cross slide in place.

The requirements for lubricants can be found in:
„20. Datasheet - lubricants for bearings" on site 27

07.06 Mounting the chain covers

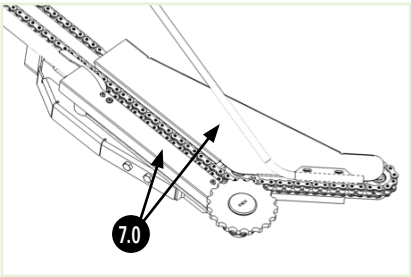

Fig. 20

Sequence of steps (Fig. 20)**:**

1. Attach the chain covers 7.0 to the machine.

8. Installation

WARNING

When installing the bine loader, the necessary personal protective equipment (PPE) must always be worn and the accident regulations must be observed. The bine loader may only be assembled in the first instance by authorised, trained and competent persons/a specialist company (dealer).

The bine loader has multiple parts and can be delivered disassembled if necessary (see Fig. 3).

1. The bine loader is attached to the side of the tractor/tractor unit using special devices (Fig. 12) at the front and rear. These devices, the hydraulic connections and the controller are not included in the scope of delivery. When using the devices, the instructions of the respective manufacturers must be observed. One attachment point of the machine is in the area of the bine entrance and the other two are in front of the tear-off head (see Fig. 4). The attachment points of the bine loader must be prevented from working themselves loose on the tractor. The devices can usually be adjusted hydraulically and must be stable and sufficiently sized to withstand the considerable strain caused by bumps, vibrations, etc. during harvesting and transport for further processing. There is a risk to life if attachment devices are incorrectly sized.

2. The drive motor of the bine loader is connected to the hydraulics of the tractor. Ensure that the right hydraulic hoses and couplings are used for the loads, e.g. from pressure for the flow and return. When using the hydraulic hoses and couplings, the instructions of the respective manufacturer must be observed. The hydraulic hoses must be securely attached so that they cannot be damaged during operation, e.g. kinked or torn off. There is a risk to life if hydraulic hoses are incorrectly sized.

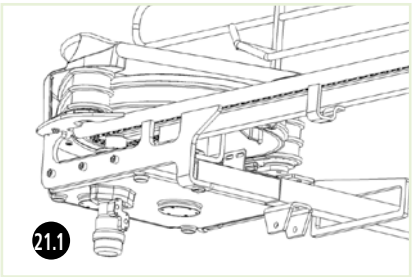

Fig. 10

Connected load of drive motor (Fig. 10)**:**

- Pressure drop max. 140 bar
- Pressure max. 150 bar (0-100 rpm)
- Flow rate max. 60 l/min

Caution
Hydraulic oil and lubricants must not escape into the environment.

3. If using a loading truck, the dimensions (Fig. 12) must be observed. If using the control block, the instructions of the respective manufacturer must be observed.

NOTICE

Caution
For hop gardens with a height of less than 8 m, the inclination of the machine must be adjusted.
In this case, the inclination of the machine towards the loading truck should be set to a correspondingly smaller angle to allow the bines to be loaded correctly onto the truck.

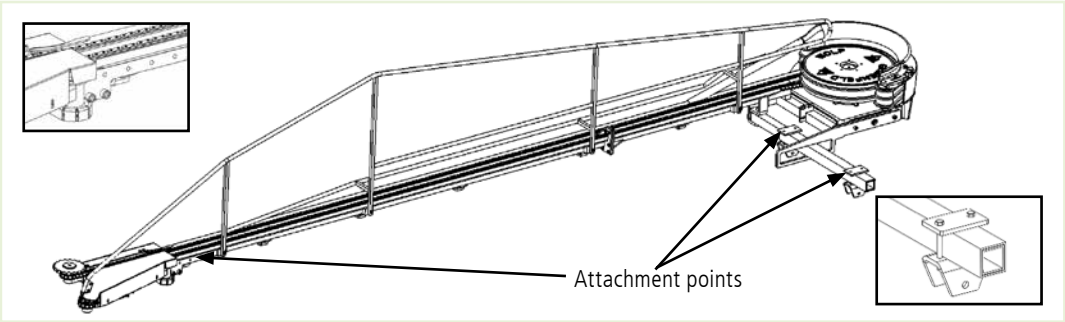

Fig. 11

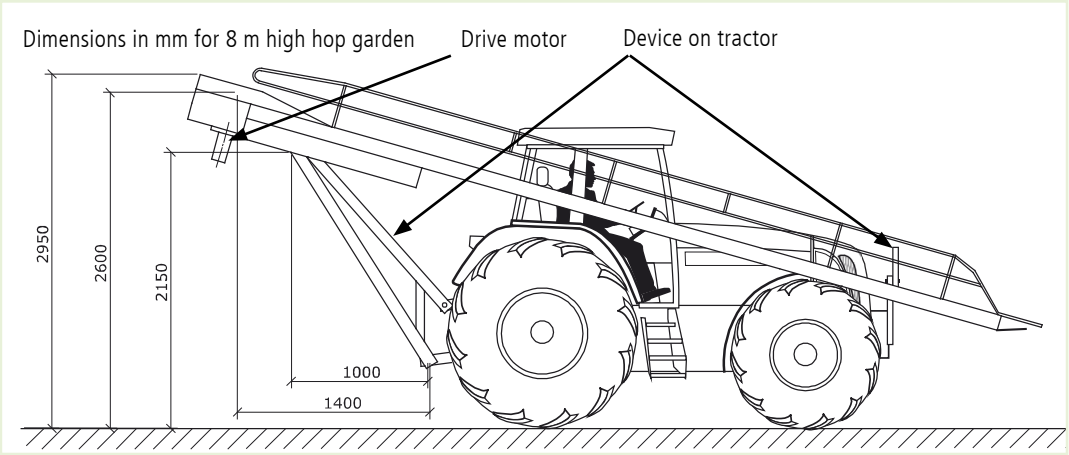

Fig. 12

The dimensions in Fig. 12 refer to average values for an 8 m high hop garden (bine height 6.5 m). They will vary depending on the height of the hop garden and the size of the tractor.

9. Working procedure

WOLF bine loaders are only intended for use in hop harvesting, for cutting and harvesting hop bines from a hop garden typical for the Holledau region. Any other use is not in accordance with the intended purpose of the machine.

1. The harvest begins in the hop field. The bine loader is located on the side of the tractor/tractor unit (Fig. 12).
2. The bine loader is brought into the correct position by the operator in front of the hop bine row.
3. The tractor/tractor unit (Fig. 12) moves forward and the bine loader is switched on. The infeed chains 1.0 (Fig. 1) must have the same speed as the tractor. The hop bines are drawn in via infeed chains 1.0 (Fig. 1) and cut off with the disc cutter 3.0 (Fig. 2). The chain guide 4.0 transports the bine to the tear-off head 10.0 (Fig. 4). Here, the hop bine is separated from the hop garden.
4. When the harvesting process is finished, the machine must be returned to the initial position and the hydraulics switched off. In doing this, ensure that the machine is secured against unintentional restarting.

Every day:

- Check the chain tension 14.0 (Fig. 2) and adjust if necessary
- Lubricate all chains 1.1 and 1.2 (Fig. 2) at least once; more often if necessary
- Lubricate the chain guide 4.0 at least once; more often if necessary
- Check the lubrication of all ball bearings 24.0 (Fig. 13) and lubricate if necessary
- Check the profile belt tension 20.0 (Fig. 8) and adjust if necessary
- Check the disc cutter 3.0 (Fig. 2) and adjust if necessary

⚠ DANGER

During operation, no persons/harvesters may be present in the immediate vicinity of the bine loader. There is a risk to life!

On public roads or when transporting the bines onwards, the machine must be returned to the initial position and the hydraulics switched off. In doing this, ensure that the machine is secured against unintentional restarting. There is a risk to life!

Dirt on the machine that poses a danger to public road traffic, other persons or safe operation must be removed. There is a risk to life!

10. Commissioning

Please read carefully before commissioning the machine!

The bine loader may only be commissioned in the first instance by authorised, trained and competent persons/a specialist company (dealer).

WARNING **Before** commissioning the machine, all protective devices, fastenings, the oil level, bearing lubrication and hose connections must be properly fitted and checked. The machine must be mounted on the tractor/tractor unit and approved (acceptance report) by the specialist company (dealer) in accordance with the legal country-specific safety requirements and road traffic regulations.

WARNING **Adjustments to the controls in the tractor:**

- may only be made by the operator when the machine is running!

WARNING **Adjustment, maintenance and cleaning:**

- Adjustments, maintenance and cleaning work may only be carried out when the machine is switched off and secured against unintentional restarting.
- For adjustment, maintenance and cleaning work, a suitable location must be selected (dry, solid ground) where the machine can stand firmly and securely on solid ground and be easily accessible from all sides.
- The tractor/tractor unit must be prevented from rolling forwards or backwards.

Check the following during commissioning:

- Correct assembly of the bine loader
- Correct mounting and attachment to the tractor/tractor unit
- Correct adjustment and, if necessary, lubrication of the moving parts (chains, disc cutters, profile belts, oil level, etc.)
- Chain and profile belt correctly tensioned
- The bine loader is clean and no objects have been left on or in it.

As a rule, commissioning is carried out by a specialist company (dealer). If this is not the case, commissioning must be carried out by specially trained and qualified persons according to our instructions.

11. Adjustments

Special care must be taken during maintenance, adjustment and cleaning work. Personal protective equipment (PPE) must be used.

Maintenance, adjustment and cleaning work may only be carried out when the bine loader and all moving parts are at a standstill and the drive is depressurised. To prevent the machine being started unintentionally, the tractor's hydraulics must be secured.

Adjustment, maintenance and cleaning:

- For adjustment, maintenance and cleaning work, a suitable location must be selected (dry, solid ground) where the machine can stand on solid ground and be easily accessible from all sides.
- Adjustment, maintenance and cleaning work may only be carried out when the machine is at a standstill.

Adjustment:

11.01 Chain tension

NOTICE

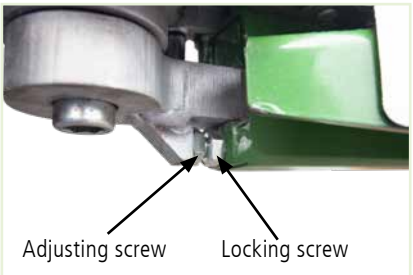

Fig. 13

The chain tension of the infeed chains 1.0 (Fig. 1) can be adjusted via the chain tensioner 14.0 (Fig. 2). To do this, firstly loosen the locking screw on the chain tensioner and set the required chain tension using the adjusting screw. The chain should not be too loose or sag. After finishing the adjustment, tighten the screws again.

Incorrectly adjusted chain tension increases wear and tear, reduces the service life of the parts concerned and interferes with the function of the machine!

11.02 Disc cutter

NOTICE

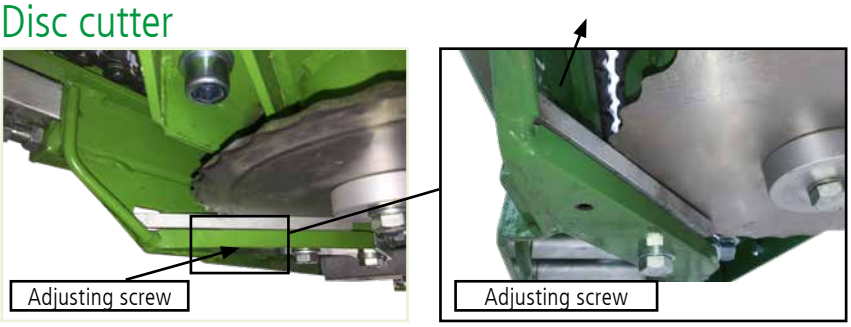

Fig. 14

The cutting function of the disc cutter 3.0 (Fig. 2) is adjusted by the distance to the cutting plate 3.1 (Fig. 2). The cutting plate 3.1 (Fig. 2) should only touch the disc cutter 3.0 (Fig. 2).

An incorrectly adjusted cutting function increases wear and tear, reduces the service life of the parts concerned and interferes with the function of the machine!

11.03 Guide brackets

NOTICE

The guide brackets at the top 13.0 (Fig. 2) and bottom 13.1 (Fig. 2) can be adjusted to the required distances using the adjusting screw. This depends on the diameter of the bine.

After finishing the adjustment, tighten the screws again.

An incorrectly adjusted guide bracket can interfere with the function of the machine!

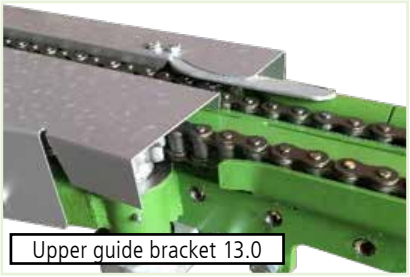

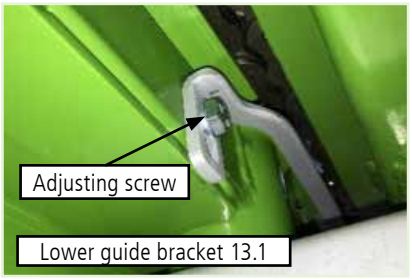

Fig. 15

11.04 Profile belt

Firstly, the adjusting screws must be loosened, then the tension of the profile belt 19.0 (Fig. 4) can be adjusted using the two belt tensioners 20.0 (Fig. 4). The profile belt 19.0 must not be too loose and should move with the drive pulley.
Ensure that the profile belt 19.0 (Fig. 4) runs straight and does not rub against the tear-off head 8.0 (Fig. 4).

NOTICE

An incorrectly adjusted profile belt increases wear and tear, reduces the service life of the parts concerned and interferes with the function of the machine!

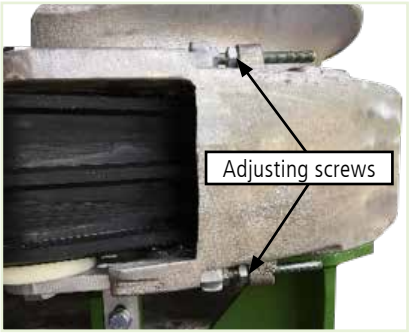

Fig. 16

11.05 Deflection bracket

Fig. 17

NOTICE

The distance of the deflection bracket 22.0 (Fig. 4) to the drive pulley 18.0 (Fig. 4) can be adjusted.
The required distance depends on the hop variety.

An incorrectly adjusted deflection bracket can interfere with the function of the machine!

11.06 Chain speed

The drive motor is operated by the tractor's hydraulics (customer side). For trouble-free operation, the harvesting speed of the tractor must be the same as the chain speed. For this reason, the chain speed must be controllable, e.g. via a
flow control valve with manual adjustment (customer side).

12. Separation points

12.01 Separation point A

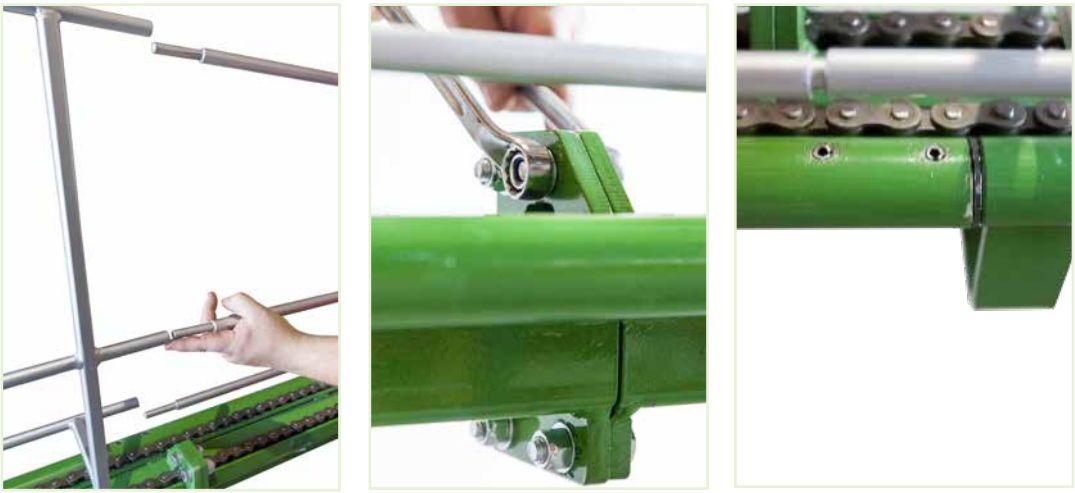

Fig. 18

WARNING

Special care must be taken when separating the bine loader into its individual parts.

The machine may only be separated when the bine loader, all moving parts and the depressurised drives are at a standstill.

At least two persons are necessary and suitable lifting equipment is required.

Personal protective equipment (PPE) must be used. Separation should be carried out by qualified personnel.

1) Dismount the bine loader before separating it from the tractor and place it on solid ground.
2) Release the infeed chain 1 (Fig. 2).
3) Loosen the chain guide spring pins (Fig. 2) on the bine guide.
4) Loosen the screws on the chain guide (Fig. 2). The chain guide and bine guide can be carefully separated.

DANGER

Caution:

Risk of tipping/risk to life: the bine loader must be secured accordingly by suitable means.

12.02 Separation point B

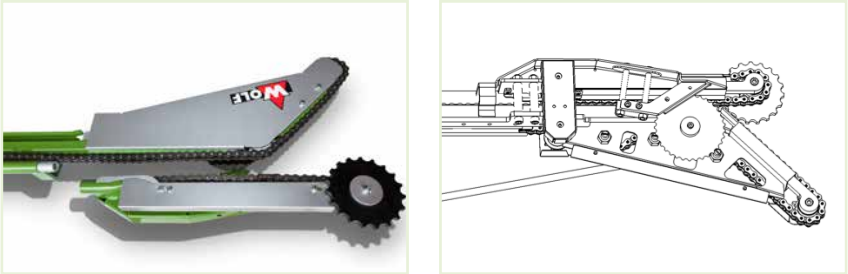

Fig. 19

Special care must be taken when separating the chain module. The chain module may only be separated when the bine loader, all moving parts and the depressurised drives are at a standstill.

At least two persons are necessary and suitable lifting equipment is required. Personal protective equipment must be used. Separation should be carried out by qualified personnel.

1) Undo the cover of the connecting chain 15.1 (Fig. 2) and open the connecting chain
2) Carefully undo the 4 screws on the infeed chain 2 15.0 (Fig. 2).

Caution:
Prevent the chain modules from accidentally coming loose.

13. Operating personnel/training

The **operator** of the bine loader must select suitable personnel for receiving training and ensure their availability. **Training** must be carried out in the operator's **own language**. **Non-trained persons** must not operate or commission the machine.

The operator of the system must provide all instructions, training and directions in writing.

The machine is operated by one person. This must be a responsible, careful person who has constant control over the operation of the bine loader and has received training on accident prevention regulations. During operation, no person/harvester may stand in the immediate vicinity of the machine or reach into it, especially in the area of the infeed chains. The operator is responsible for ensuring that no other persons are present in the danger area.

Always keep this operating manual close to your machine and within easy reach, so you can find the information you need at any time.

DANGER

Dangers from unqualified personnel

Only trained adult personnel with no physical disability (fully competent persons) may operate the bine loader.
The operator/machine operator must receive training every year before harvesting begins on accident prevention regulations, correct operation of the machine and possible health hazards. All persons entrusted with work on or with the machine must have received correct training in its operation before starting work and must have read and understood the operating manual.

The names of the persons present for training must be recorded in a list.

14. Workplace of the operating personnel

The operator's workplace is on the tractor/tractor unit. The machine is operated by one person from this workplace. The operator's view of the working area of the machine must always be unrestricted.

The machine may only be operated by adults with no physical disability who hold a legally valid driving licence. Operating personnel must receive detailed information on the hazardous nature of the situation and measures for accident prevention. Personal protective equipment (PPE) must be used. There are certain dangers associated with the working area of the machine and transport operations (bringing in the crop and unloading the hop bines). The operator
of the machine is obliged to prepare a risk assessment and provide the operating personnel with detailed training.

15. Maintenance

NOTICE

Our warranty obligation is voided if damage is caused by improper handling and/or inadequate maintenance. Adhere to the maintenance intervals of the machine.

Special care must be taken during maintenance work. Personal protective equipment must be used.

Maintenance, adjustment and cleaning work may only be carried out when the bine loader and all moving parts are at a standstill and the drives are depressurised. To prevent the machine being started unintentionally, the tractor's hydraulics must also be prevented from unintentional restarting.

Ensure that during operation, maintenance and cleaning, no lubricants or harmful substances, for example, are released into the environment (environmental pollution is a criminal offence in Germany).

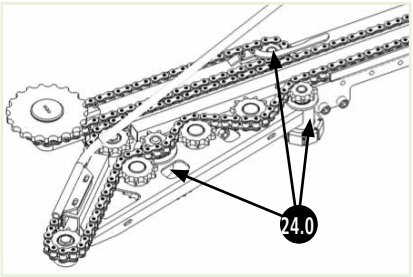

Fig. 20

Ball bearings with grease nipple 24.0 (Fig. 20) must be greased/ lubricated after commissioning, and after 30 operating hours if they are replaced! Too much grease damages the bearings as it can cause overheating. Ensure that the old grease can escape unhindered.

Ball bearings that do not have a grease nipple are maintenance-free and do not require lubrication.

Ensure that all lubricants, oils and greases are suitable for use with foodstuffs.

See note in: "„19. Datasheet – gearbox oil" and "„20. Datasheet - lubricants for bearings".

15.01 Maintenance checklist

Periodic maintenance and cleaning of the machine depends on the throughput, loading and amount of dirt of the bine loader.

NOTICE

Daily checks

- The attachment points (Fig. 5), the function of the moving parts, the drive motor and the oil level 21.0 (Fig. 4) must be checked and tested at least once. Loose or defective parts must be tightened, repaired or replaced.
- Check the chain tension 14.0 (Fig. 2) and adjust if necessary
- Lubricate all chains 1.1 and 1.2 (Fig. 2) at least once; more often if necessary
- Lubricate the chain guide 4.0 at least once; more often if necessary
- Check the lubrication of all ball bearings 24.0 (Fig. 20) and relubricate if necessary
- Check the profile belt tension 20.0 (Fig. 4) and adjust if necessary
- Check the disc cutter 3.0 (Fig. 2) and adjust if necessary

15.02 Replacing the profile belt

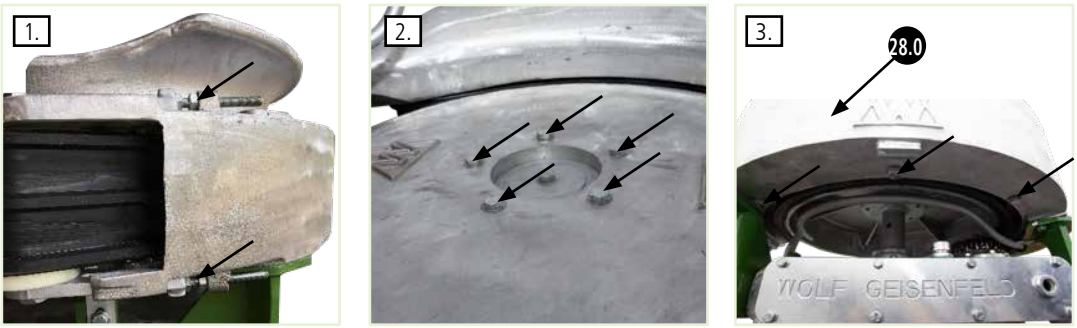

Fig. 21

1) Release the belt tensioner.
2) Undo the screws in the drive pulley 18.0.
3) Undo the screws below the curved housing 28.0; remove the curved housing and spring pin
4) Dismount the rollers
5) Change the profile belt

16. Cleaning

WARNING

Special care must be taken during maintenance, adjustment and cleaning work. Personal protective equipment (PPE) must be used.

Maintenance, adjustment and cleaning work may only be carried out when the bine loader and all moving parts are at a standstill and the drives are depressurised. To prevent the machine being started unintentionally, the tractor's hydraulics must be secured.

If chain covers, e.g. 7.0 (Fig. 1), were removed for maintenance and cleaning work, ensure that all moving and rotating parts are at a standstill. The machine must not be operated unless the chain covers are correctly attached.

Ensure that during operation, maintenance and cleaning, no lubricants or harmful substances, for example, are released into the environment (environmental pollution is a criminal offence in Germany).

Periodic maintenance and cleaning of the system depends on the throughput, loading and degree of contamination of the bine loader. Ensure that the machine is always in good overall condition.

NOTICE

Caution:

- Do not use any cleaning agents that may damage the machine.
- When using pressure cleaners, ensure they do not damage the machine (keep at least 500 mm away and reduce the pressure to a minimum)
- Cleaning agents or hot water can dissolve grease, oil and lubricants. Before commissioning or starting the machine, regreasing and a function check may therefore be necessary (see „15.01 Maintenance checklist" on site 22)

16.01 After the harvest

NOTICE

- Thoroughly clean the entire machine immediately
- Regrease the ball bearings and oil the chains
- Loosen the profile belt 19.0 (Fig. 4) using the belt tensioner 20.0 and re-tension it before the next harvest begins.

17. Dismantling and disposal

Most of the materials used are recyclable and can be reused. Even before beginning dismantling, a dismantling plan should be drawn up with details about recycling.

Dismantling must be carried out by qualified persons with due regard for health protection and with the use of personal protective equipment (PPE).

17.01 Dismantling

Before starting dismantling, depressurise all parts of the machine, and the motors and hoses within it. All hydraulic connection lines must be removed by qualified personnel. Furthermore, all media-carrying and energy-carrying components must be dismantled by a specialist.

The professional disposal of lubricants, plastics, etc. should be carried out by a specialist company!

After this, the system can be disassembled into its individual modules or parts on site. This should also be carried out by a specialist company that has knowledge of environmentally sound disposal methods.

When handling components that have been exposed to dust and dirt, wear suitable protective equipment and a breathing mask!

17.02 Disposal

The following materials are used in our machines:

- Solids: coated steel frame profiles, cast aluminium housing, steel chains, rubber bands, plastic rollers, seals, hot-dip galvanised sheet steel, bearings
- Fluids: gearbox oils, lubricants, hydraulic oils

All materials can be disposed of at hazardous waste sites or, depending on their composition (in accordance with current regulations), at standard construction waste sites.

Before disposing of any materials, contact the responsible local authority and/or waste disposal company to discuss the condition of the materials concerned!

18. Emergency number (EU) 112

The operator of the bine loader must affix the customary national emergency number in a clearly visible position in the working area!

Our machines undergo constant further development. We reserve the right to make design changes. We expressly point out that deviations in the operating manual may occur due to the various versions of these partly completed machines, frequent design changes and also the many special versions that we produce.

Please contact us if you have any questions.

WOLF Anlagen-Technik GmbH & Co. KG
Agricultural Engineering Business Division, Münchener Str. 54
85290 Geisenfeld, GERMANY

Telephone +49 (0)8452 99-0
Fax +49 (0)8452 8410
Email info.lt@wolf-geisenfeld.de
Internet www.wolf-geisenfeld.de

We would be happy to offer advice and assistance:

Telephone +49 (0)8452- 99220/ - 99222
Fax +49 (0)8452-8410/ - 99502

19. Datasheet – gearbox oil

Identification/qualification
Lubricating oils CLP according to DIN 51 517, part 3
ISO-L-CKC according to ISO 6743-6 and ISO 12925-1
Flender (ISO VG 150 – 680)

Key data	Test procedure	Unit	Gearbox oil
Viscosity class	DIN ISO 3448	ISO VG	220
Density at 15 °C	DIN 51 757	kg/m³	897
Kin. viscosity	DIN 51 562	mm²/s	215 (40 °C) 18.8 (100 °C)
Viscosity index	DIN ISO 2909	VI	98
Flash point COC	DIN ISO 2592	°C	>220
Pour point	DIN ISO 3016	°C	< -15
FZG test A/8.3/90	DIN ISO 14635-1	SKS	Testing with ISO VG 68 and 150
			> 12
FZG test A/16.6/90	DIN ISO 14635-1	SKS	Testing with ISO VG 150
			> 12
Grey stain resistance step test: GFT high	FVA no. 54/7	SKS	Testing with ISO VG 68 and 150
			> 10
Corrosion protection steel	DIN ISO 7120	Degree of corrosion	Passed
Corrosion protection copper	DIN EN ISO 2160	Degree of corrosion	1

Specifications are average values and are subject to the usual production fluctuations.
They are not legally binding.

NOTICE

Environmental safety:
Lubricants must not be allowed to enter the sewerage system, soil or water.

20. Datasheet - lubricants for bearings

Identification/qualification
DIN 51 825 - KPE 2 K-30 / KPE 1 K-30
DIN 51 502 ISO-L-XCCEB 2 / ISO-L-XCCEB 1 to ISO 6743
MAN 283 LiP 2-B

Key chem. and phys. data	Unit	Test procedure	Lubricants
NLGI grade	----	DIN 51 818	2
Worked penetration	1/10 mm	DIN ISO 2137	265 to 295
Thickener	---	---	Lithium 12-hydroxystearate
Drop point	°C	DIN ISO 2176	Approx. 185
Temperature operating range	°C	---	-35 to +120
Base oil viscosity at 40 °C	mm^2/s	DIN 51 562	Approx. 100
VKA welding force	N	DIN 51350-4	2800
Behaviour in the presence of water	---	DIN 51 807/1	1 - 90
Corrosion protection	Degree of corrosion	DIN 51 802	0
Biodegradability	% by weight	OECD 301 B	78

Specifications are average values and are subject to the usual production fluctuations.
They are not legally binding.

NOTICE

Environmental safety:
The lubricants used must be biodegradable.

9M10ND1-K1

Printed in Germany